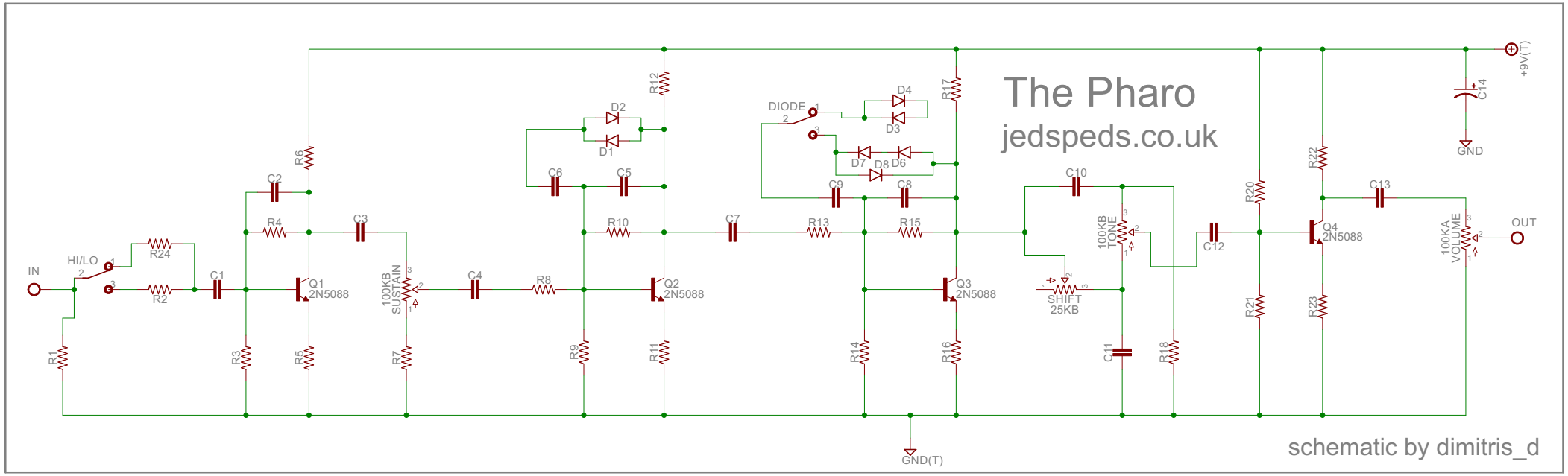
The Pharo
jedspeds.co.uk
schematic by dimitris_d
IN
OUT
HI/LO
R24
R2
R1
C1
R3
R4
C2
R5
R6
Q1
2N5088
C3
100KB
SUSTAIN
R7
C4
R8
R9
R10
C5
C6
D1
D2
R11
R12
Q2
2N5088
C7
R13
R14
R15
C8
C9
DIODE
D3
D4
D6
D7
D8
R16
R17
Q3
2N5088
C10
SHIFT
25KB
100KB
TONE
C11
R18
C12
R20
R21
R22
R23
Q4
2N5088
C13
100KA
VOLUME
C14
GND
+9V(T)
GND(T)