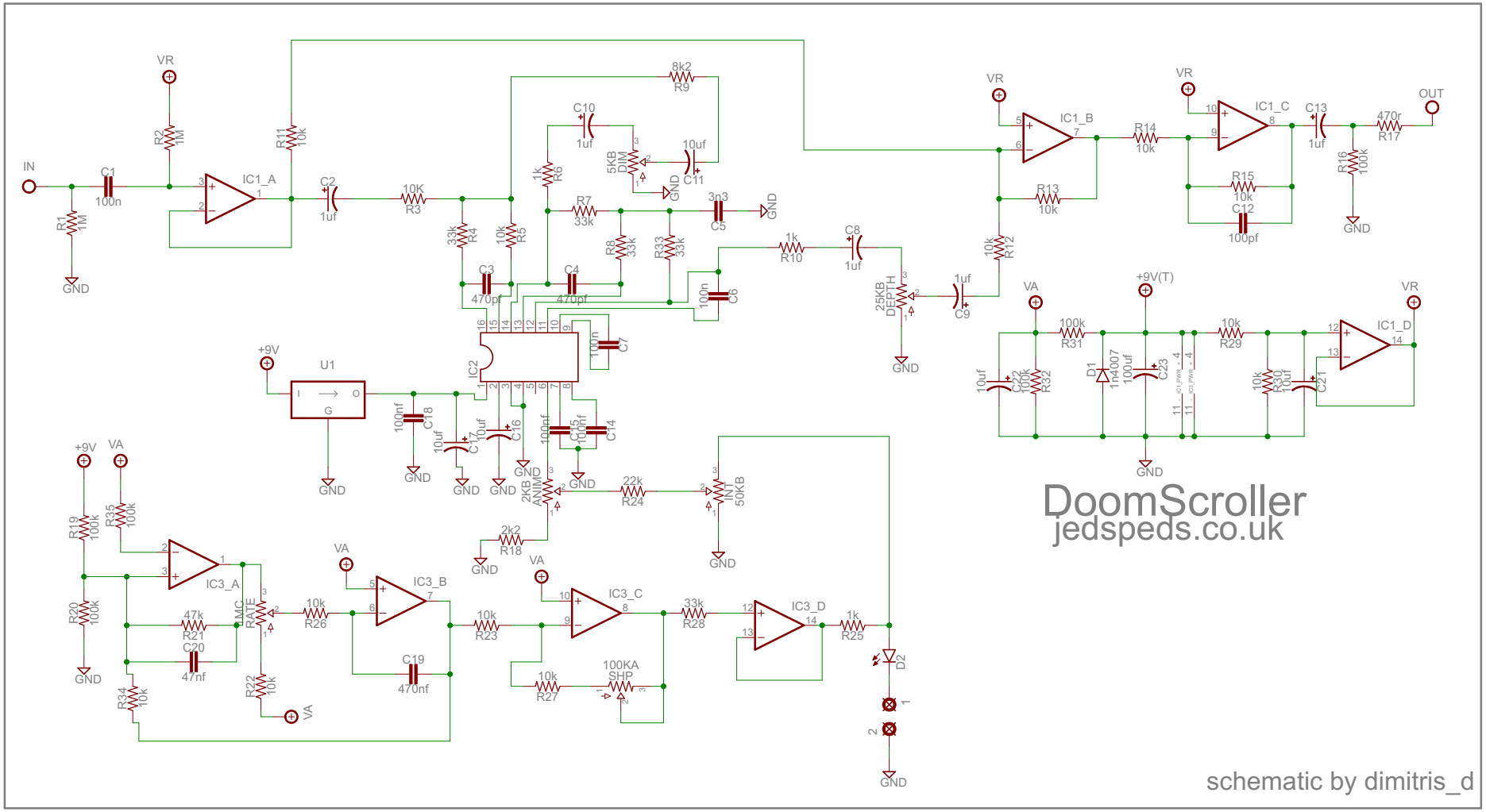
IN
OUT
VR
VA
+9V
+9V(T)
GND
IC1_A
IC1_B
IC1_C
IC1_D
IC2
IC3_A
IC3_B
IC3_C
IC3_D
U1
R1 1M
R2 1M
C1 100n
C2 1uf
R3 10K
R4 33k
R5 10k
R6 1k
R7 33k
R8 33k
R9 8k2
R10 1k
R11 10k
R12 10k
R13 10k
R14 10k
R15 10k
R16 100k
R17 470r
R18 2k2
R19 100k
R20 100k
R21 47k
R22 10k
R23 10k
R24 22k
R25 1k
R26 10k
R27 10k
R28 33k
R29 10k
R30 10k
R31 100k
R32 100k
R33 33k
R34 10k
R35 100k
C3 470pf
C4 470pf
C5 3n3
C6 100n
C7 100n
C8 1uf
C9 1uf
C10 1uf
C11 10uf
C12 100pf
C13 1uf
C14 100nf
C15 100nf
C16 10uf
C17 10uf
C18 100nf
C19 470nf
C20 47nf
C21 10uf
C22 10uf
C23 100uf
D1 1n4007
D2
5KB DIM
25KB DEPTH
2KB ANIM
MC RATE
50KB
100KA SHP
DoomScroller
jedspeds.co.uk
schematic by dimitris_d