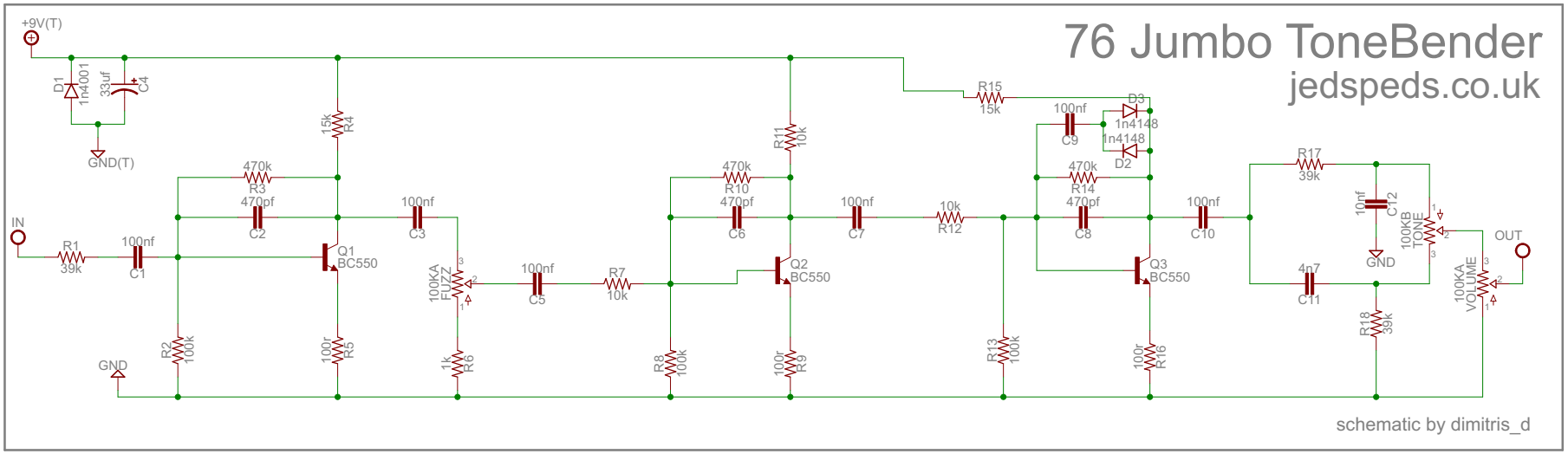
76 Jumbo ToneBender
jedspeds.co.uk
+9V(T)
D1
1n4001
33uf
C4
GND(T)
IN
R1
39k
100nf
C1
GND
R2
100k
470k
R3
470pf
C2
15k
R4
100r
R5
Q1
BC550
100nf
C3
100KA
FUZZ
1k
R6
100nf
C5
R7
10k
R8
100k
470k
R10
470pf
C6
R11
10k
100r
R9
Q2
BC550
100nf
C7
10k
R12
R13
100k
R15
15k
100nf
C9
D3
1n4148
1n4148
D2
470k
R14
470pf
C8
Q3
BC550
100r
R16
100nf
C10
R17
39k
10nf
C12
GND
100KB
TONE
4n7
C11
R18
39k
100KA
VOLUME
OUT
schematic by dimitris_d